NCT®

Turning Controls

Collection of Part Program Examples

Produced and developed by **NCT Ipari Elektronikai kft**.
H1148 Budapest Fogarasi út 7
⊠ P. O. Box: H1631 Bp. pf.: 26
☎ Phone: (+36 1) 467 63 00
☎ Fax:(+36 1) 363 6605
E-mail: nct@nct.hu
Home page: www.nct.hu

Table of Contents

06.07.19

1 Contour Definition by Programming Angle

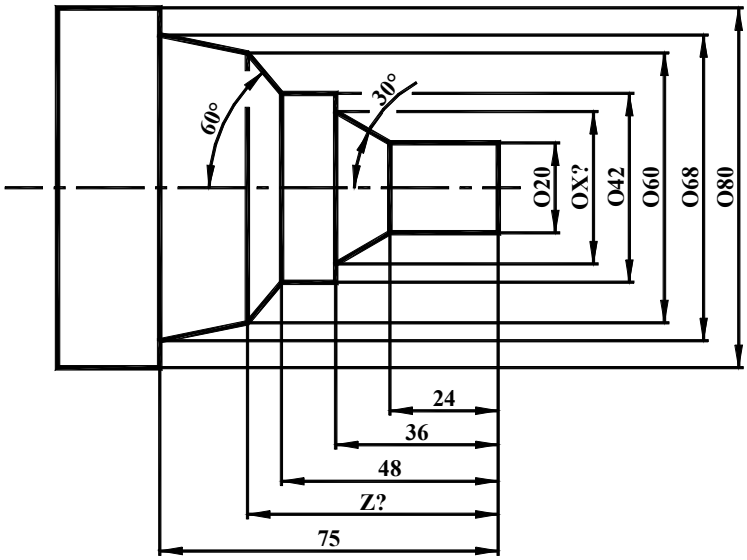

Diagram 1

```
%O7001(EXAMPLE 01)
N100 G0 X200 Z200
N110 T101
N120 G0 X82 Z6
N130 G92 S3500
N140 G96 S150 F0.5 M3 M8
N150 G79 X-1 Z5
N160 Z3
N170 Z1
N180 Z0
N190 G0 X82 Z2
N200 G71 U1 R0.5
N210 G71 P230 Q310 U0.3 W0.3 F0.5
N220 G0 X20 Z2
N230 G42 X20 Z1
N240 G1 Z-24
N250 G1 Z-36 ,A150
N260 G1 X42
N270 G1 Z-48
N280 G1 X60 ,A130
N290 G1 X68 Z-75
N300 G1 X82
N310 G40 X84
N320 G0 X200 Z200
N330 G97 S200
N340 M30
%
```

In this example definition of a simple contour is shown. First line of the program is started by a percent symbol indicating the beginning of program and by the program identifier. The following line is a security orientation with the last compensation set in case there is no compensation call, thus in certain cases - e.g. in case of a not or falsely measured cutter - error message END STATE appears. This is followed by the switch of tool and at the same time of the compensations. Then an orientation and afterwards the setting of constant cutting rate takes place, first by defining the maximum revolution (G92), then by giving the real cutting rate (G96). At the end of program (machining) constant cutting rate must be turned off (G97) because of potential chuck run-ups. The approximate revolution, with which the chuck would rotate after orientation must be set to G97. In case of sawed works the surface is best to be smoothed with cycle G97. Radius compensation must be active under contour roughing, especially when calculating intersection point.

2 Contour Definition by Rounding

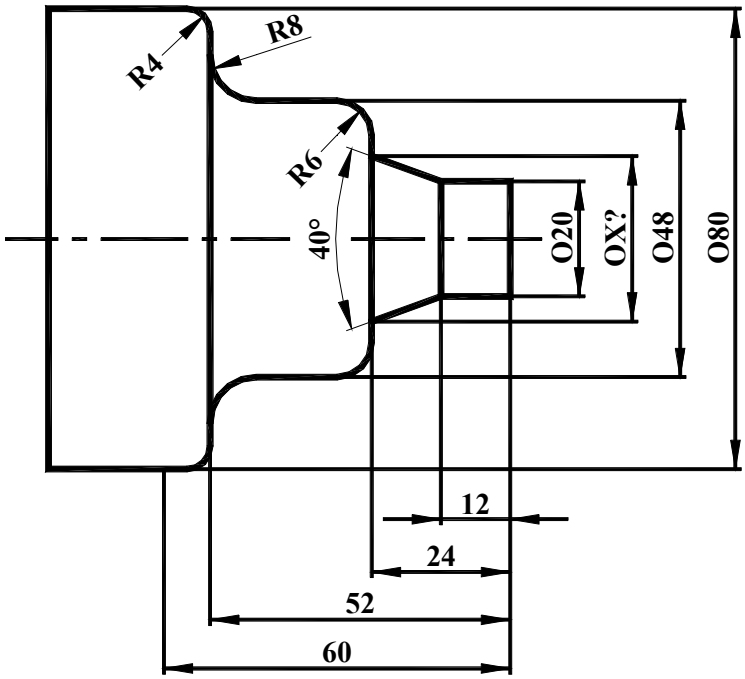

Diagram 2

```
%O7002(EXAMPLE 02)
N100 G0 X200 Z200
N110 T101
N120 G0 X82 Z6
N130 G92 S3500
N140 G96 S150 F0.5 M3 M8
N150 G79 X-1 Z5
N160 Z3
N170 Z1
N180 Z0
N190 G0 X82 Z2
N200 G71 U1 R0.5
N210 G71 P230 Q310 U0.3 W0.3 F0.5
N220 G0 X20 Z2
N230 G42 X20 Z1
N240 G1 Z-12
N250 G1 Z-24 ,A160
N260 G1 X48 ,R6
N270 G1 Z-52 ,R8
N280 G1 X80 ,R4
N290 G1 Z-60
N300 G1 X82
N310 G40 X84
N320 G0 X200 Z200
N330 G97 S200
N340 M30
%
```

Only rounding differs to the previous example. Intersection point is programmed between two rounded blocks and the measure of rounding is written in the first block at address “,R”. Cones are also programmed at address “,A”, just like in the previous example. Angle definition is from the positive axis Z to the direction of the sign. For the sake of esthetic surface and availability of cutter features it is advised to use constant cutting rate as in the case of almost all turnings. Head surface is machined by head roughing cycle also in this case. In case of cone and sphere turning it is obligatory to activate contour tracking, otherwise the contour s distorted. In case of positioning on and off as well as when programming very sharp angles and in case of small movements the programmed movement must be larger than the tool angle radius..

3 Contour Definition by Angles and Rounding

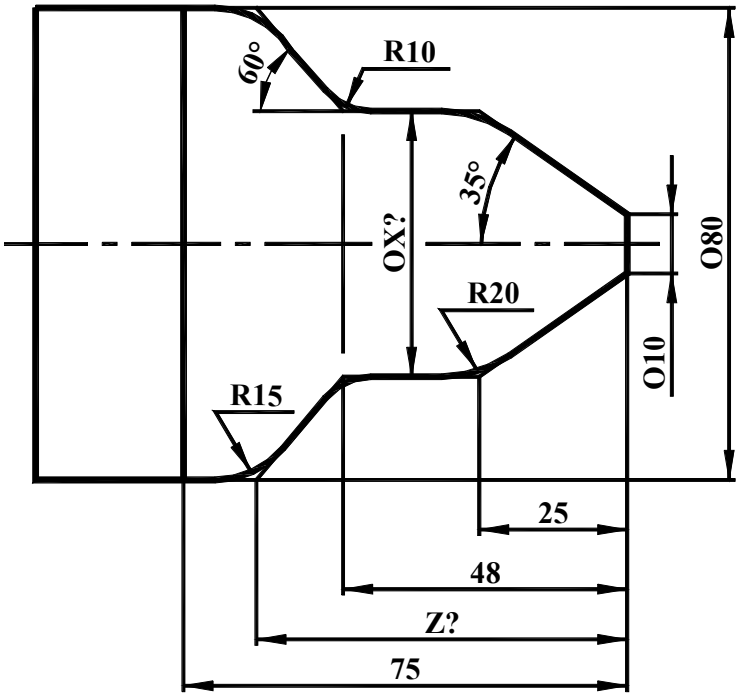

Diagram 3

```
%O7003(EXAMPLE 03)
N100 G0 X200 Z200
N110 T101
N120 G0 X82 Z6
N130 G92 S3500
N140 G96 S150 F0.5 M3 M8
N150 G79 X-1 Z5
N160 Z3
N170 Z1
N180 Z0
N190 G0 X82 Z2
N200 G71 U1 R0.5
N210 G71 P230 Q310 U0.3 W0.3 F0.5
N220 G0 X60 Z5
N230 G42 X6 Z2
N240 G0 Z-10
N250 X10 Z0 ,A145
N260 Z-25 ,A145 ,R20
N270 Z-48 ,R10
N280 X80 ,A120 ,R15
N290 Z-75
N300 X82
N310 G40 X85
N320 G0 X200 Z200
N330 G97 S200
N340 M30
%
```

The characteristic of this example is that the conic parts are defined by half cone angle. In the program the cone angle is positive from the positive direction of axis Z to the positive direction of axis X, and negative in the opposite direction. The beginning of contour is also started by defining an intersection point as auxiliary point for the tool path not to break. Side cycle is also programmed at the beginning of program to eliminate allowance. Rounding in case of spheric surfaces must be programmed at address ,R. It is obligatory to activate contour track when applying automatic intersection point calculation - not only to avoid contour distortion.

4 Contour Definition by Chipping

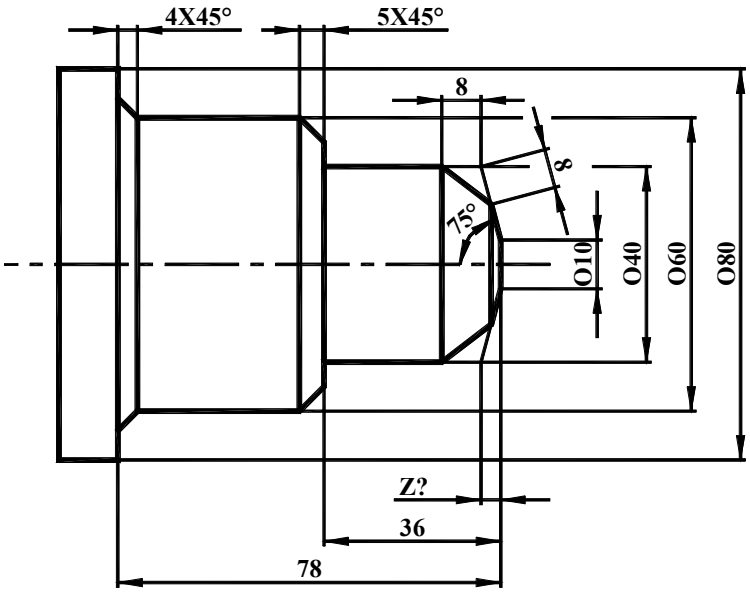

Diagram 4

```
%O7004(EXAMPLE 04)
N100 G0 X200 Z200
N110 T101
N120 G0 X82 Z6
N130 G92 S3500
N140 G96 S150 F0.5 M3 M8
N150 G79 X-1 Z5
N160 Z3
N170 Z1
N180 Z0
N190 G0 X82 Z2
N200 G71 U1 R0.5
N210 G71 P230 Q310 U0.3 W0.3 F0.5
N220 G0 X8 Z5
N230 G42 X8 Z2
N240 G0 Z-10
N250 G1 X10 Z0 ,A105
N260 X40 ,A105 ,C8
N270 Z-36
N280 X60 ,C5
N290 Z-78 ,C5
N300 X82
N310 G40 G0 X85
N320 G0 X200 Z200
N330 G97 S200
N340 M30
%
```

In this example - as in the previous examples - the same cycles, rounding and chipping are used. The only difference is in the work shape to show the simplest example of preparing different contours. Let us note that when applying intersection point it is recommended to examine the engineering drawing thoroughly and to execute certain changes on the lattice in advance - especially because of clear base definition - in certain cases before writing program

5 Contour Turning - Thread Turning - Recessing

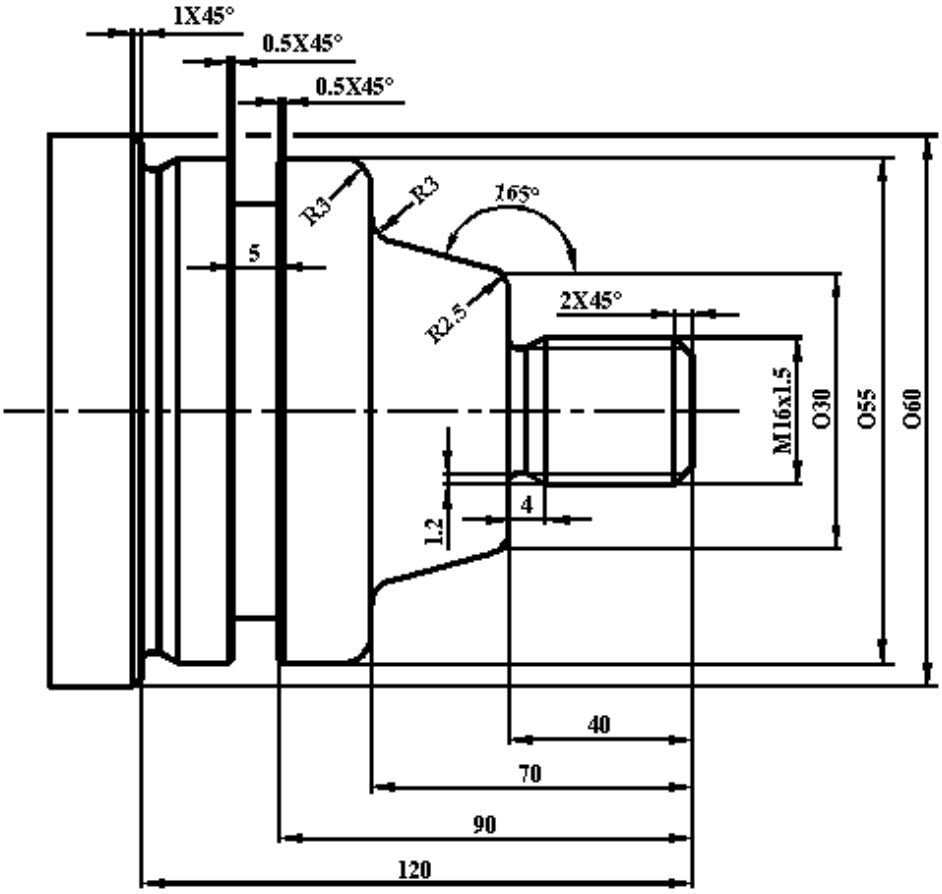

5. ábra

This program involves an entire part program. Spindle setting and head surface roughing is executed from line N120 to N190 by means of roughing cycle G79. In this cycle a quadrangular cutting path takes form by applying call point and defining the other corner of the quadrangle, so that approach and return is done by rapid traverse, while turning and lifting is executed by feed. Roughing cycle call is from N200 to N220. Line N200 is a data setting line containing only the data of approach and lifting, which means that the characteristic data of roughing cutter can be specified, thus only the second line is needed at the next roughing. /1 at the end of block indicates conditional block with the help of which roughing can be omitted in case of an out-of-size tool. Positioning must be executed a little above the external diameter of rough work before roughing cycle, because the cycle first moves by the offset that takes hold and turns. The relevant contour definition is from line N230 to N410 used also by roughing cycle to calculate roughing path. Rounding is programmed at address “,R” , chipping at address “,C”, while angles at address “,A”. Angles must be defined from positive direction of axis Z with the appropriate direction. Since roughing cycle is automatically followed by smoothing lines in program, there is no need to call for smoothing cycle (G70). In case a program part not executed during program running is referred to by roughing cycle, call of smoothing cycle is also necessary, which entirely corresponds to that of roughing cycle. Such case occurs, when the two sides of the contour undercut must be roughed by separate (right-left) cutters but smoothing can be executed by the same cutter, as well as in the opposite case, when two smoothing cutters belong to one roughing cutter. Recessing definition is from line

N410 to N680. This part shows, that the recessing cutter works with two separate compensations so that the difference between the two compensations is exactly the cutter width. The recessing cutter is best to be a little - the double of smoothing allowance - thinner than the recessing width. In this case roughing of recessing can be executed by a multiple recessing, and afterwards the sides and back is easy to smooth by the chipping edge of the two cutters. In case the recessing is much wider, use of recessing cycle (G75) is recommended instead of multiple recessing. Waiting (G4) before lifting is recommended for recessing and surfaces where abrupt cutter lifting does not result in circular cross-section. Thread turning description is from line N690. Line N710 is a data setting line consisting of the main characteristics of thread and thread cutter independent of thread size. The exact thread size can be found in line N720, similarly to roughing cycle. The return diameter is determined by coordinate X defined by previous orientation when calling thread cycle. The thread depth is half of the difference between nominal size and core size. The measure of conicity can be calculated from the difference of initial and end diameter. It is recommended to start thread turning in Z further away from the work, so that spindle revolution and axis speed can perfectly synchronize and that the thread start does not distort. Lifting can be calculated in function of the thread rise multiplied by 0.1, thus if lifting is set to 0, the cutter is lifted vertically, if it is 10, the cutter is lifted within 1 thread rise, if it is 20, the cutter is lifted within two thread rises in about 45 degree. Coordinates X and Z are always the coordinates of the position farthest from the start position of ready thread, independent of lifting. This cycle calculates the other hold depths from the first hold depth - with constant chip diameter calculation - but the calculated value is overruled by the minimal hold, should the calculated value be less!

```
%O7008(EXAMPLE 08)
N100 G0 X200 Z200
N110 T101
N120 G0 X62 Z10
N130 G92 S3500
N140 G96 S150 M8 M3
N150 G79 X-1 Z5 F0.2
N160 Z3
N170 Z1
N180 Z0
N190 G0 X62 Z2
/1 N200 G71 U1 R0.5
/1 N210 G71 U0.3 W0.3 F0.5 P250
Q370
N220 G0 X200 Z200
N230 T202
N240 G0 X16 Z10
N250 G42 X8 Z2
N260 G1 X16 Z-2 F0.2
N270 X16 Z-16
N280 X13.6 Z-18
N290 Z-20 ,R1
N300 X30 ,R2.5
N310 Z-35 ,A165 ,R3
N320 X55 ,R3
N330 X55 Z-56
N340 X52.6 Z-58
N350 Z-60 ,R1
N360 X60 ,C1
N370 Z-62
N380 X62
N400 G40 X70
N410 G0 X200 Z200
N420 T303
N430 G0 X70 Z-49
N450 X57
N460 G1 X46
N470 G4 P2
N480 G0 X57
N490 X56 Z-51
N500 G1 X54 Z-50
N510 X46
N520 G4 P2
N530 G1 ZI0.5
N540 G0 X56
N550 T313
N560 Z-44
N570 G1 X54 Z-45
N580 X45
N590 G4 P2
N600 T303
N610 G1 Z-50
N620 G4 P2
N630 G1 X46
N640 XI2
N650 ZI1
N660 G0 X200
N670 Z200
N680 G97 S500
N690 T404
N700 G0 X18 Z10
N710 G76 R0.2 P021060 Q0.2
N720 G76 X14.16 Z-19.5 F1.5 P0.92
Q0.2
N730 G0 X200 Z200
N740 M30
%
```

6 Contour Definition - with Head Roughing Cycle and Intersection Point Calculation

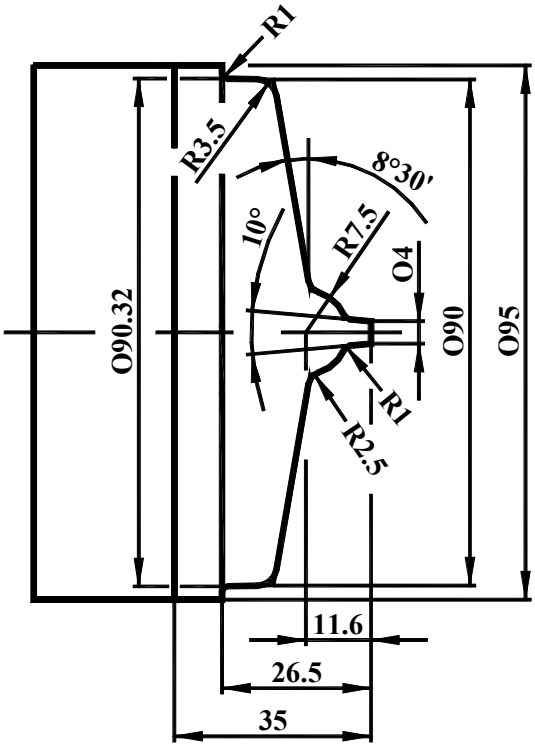

Diagram 6

```
%O7009(EXAMPLE 09)
N100 G0 X200 Z200
N110 T101
N120 G0 X98 Z6
N130 G92 S3500
N140 G96 S150 F0.5 M3 M8
/1 N150 G72 W1 R0.5
/1 N160 G72 P180 Q270 U0.3 W0.3
F0.5
N170 G0 X99 Z-35
N180 G41 X98 Z-35
N190 G1 X95
N200 Z-26.5
N210 X90.32 ,R1
N220 X90 ,A-1 ,R3.5
N230 ,A-81.5 ,R2.5
N240 G3 I0 K-11.6 R7.5 ,R1 Q-1
N250 G1 X4 Z0 ,A-5 Q1
N260 X-1
N270 G40 Z2
N280 G0 X200 Z200
N290 G97 S200
N300 M30
%
```

In relation to previous examples the essential difference is the head roughing cycle, for the material overplus to be picked off in direction Z is significantly less than that in direction X and in this case it is recommended to select this cycle in order to decrease unnecessary slide movements. Side cycle is not needed at the beginning of program due to head roughing cycle, since the first orientation was to the position ahead of sawing allowance. Intersection points between cones and spheric surfaces are defined with the help of automatic geometric calculation. In these cases the center of circle arcs can be programmed in absolute values, unlike normal circle arc definition. Constant cutting rate is also to be programmed as shown previously. Symbols /1 before roughing cycle blocks are intended to omit roughing by the use of conditional button, for example in case of testing or repairable waste.

7 Contour Turning with Roughing Cycle

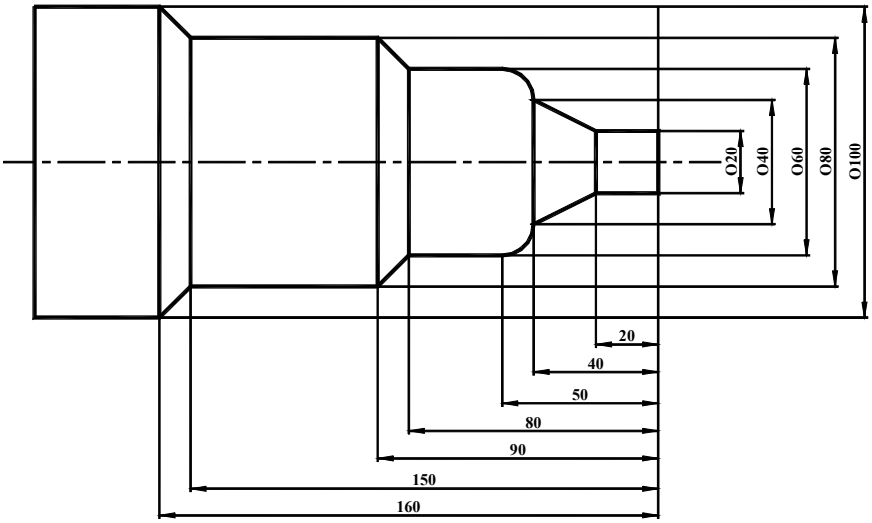

Diagram 7

```
%O7012(EXAMPLE 12)
N100 T101
N110 G0 X40 Z10
N115 G92 S2500
N120 G96 S150 M3 M8 F0.3
N130 G0 X100 Z1
N140 G71 U1 R0.5
N150 G71 U0.3 W0.3 F0.5 P170 Q270
N160 G1 X20 Z10
N170 G42 X20 Z2
N180 G1 X20
N190 Z-20
N200 X40 Z-40
N210 G3 X60 Z-50 R10
N220 G1 Z-80
N230 X80 Z-90
N240 Z-150
N250 X100 Z-160
N260 X101
N270 G40 X110
N280 G0 X110 Z50
N290 M30
%
```

This program is also an entirely simple example. Therefore only the setting of contour track on and off needs detailed explanation. When activated, a so called auxiliary position is programmed (N160) before the contour start position, from where contour positioning can be executed - with a movement larger than peak radius. This position must also not coincide with contour start position, since in this case the contour may distort because of positioning, but it is recommended to position a little ahead (N170), from where contour definition can really be started.

8 Contour Definition

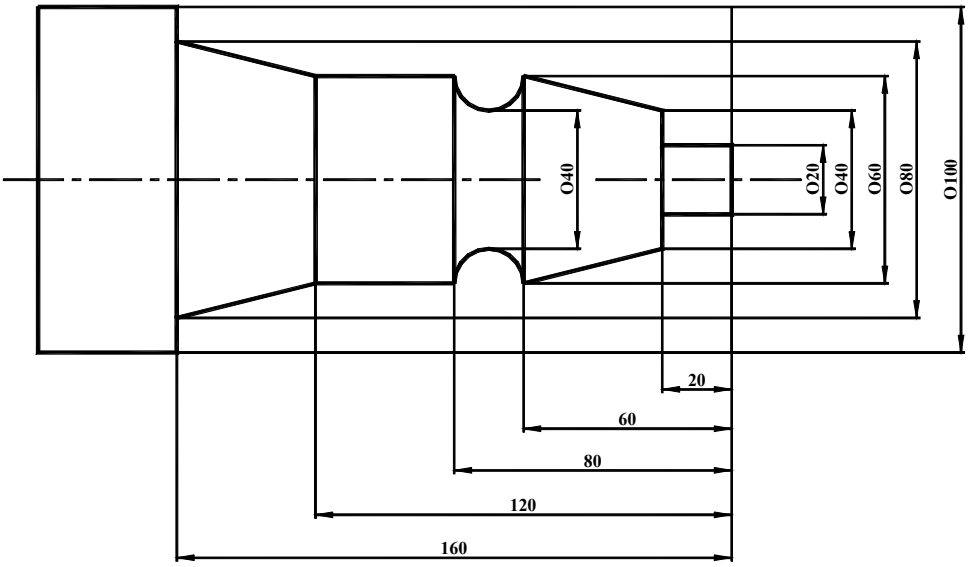

Diagram 8

```
%O7013(EXAMPLE 13)
N100 T101
N110 G0 X102 Z2
N115 G92 S2500
N120 G96 S100 M3 M8
N130 G71 U1 R1
N140 G71 U.2 W.2 F.2 P160 Q240
N150 G0 X40 Z2
N160 G42 X20 Z2 F.2
N170 G1 Z-20 F.2
N180 X40
N190 X60 Z-60
N200 G2 Z-80 R10
N210 G1 Z-120
N220 X80 Z-160
N230 X105
N240 G40 X110
N250 G0 X200 Z200
N260 M30
%
```

The speciality of this example is the reflex contour, which is important, because the roughing cycles takes the whole cycle definition into account without dealing with the space demand of roughing cutter, thus in this case roughing must also be executed with forming cutter, which is suitable for turning also the reflex. If reflex is not to be roughed with roughing cutter, a contour definition not containing and not positioning to the reflex during machining, but to which addresses P and Q of roughing cycle point is needed after M30 indicating program end. Naturally in this case reflex roughing must be taken care of separately! Example program of this sort is shown below later on.

9 Contour Definition

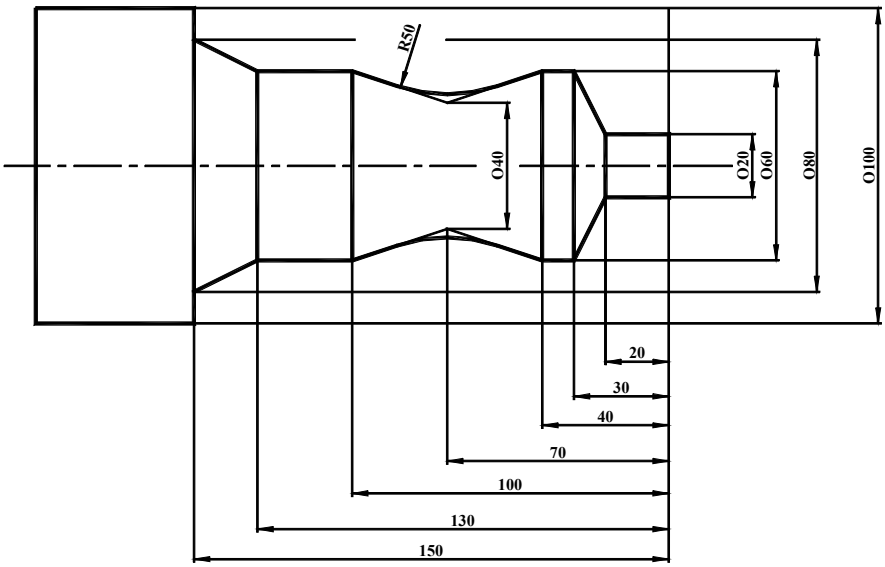

Diagram 9

```
%O7014(EXAMPLE 14)
N100 G0 X200 Z200
N110 T101
N120 G0 X40 Z10
N125 G92 S2500
N130 G96 S100 M8 M3
N140 G0 X82 Z2
N150 G71 U1 R.5
N160 G71 U.3 W.3 F.5 P190 Q280
N170 G0 X100 Z100
N180 T202
N185 G96 S120
N190 G0 G42 X20 Z2
N200 G1 Z-20 F.2
N210 G1 X60 Z-30
N220 G1 Z-40
N230 G1 X40 Z-70 ,R50
N240 G1 X60 Z-100
N250 G1 Z-130
N260 G1 X80 Z-150
N270 G1 X101
N280 G40 X110
N290 G0 X200 Z200
N300 M30
%
```

In this example roughing is followed by tool replacement, which means that smoothing is machined with a separate cutter. For security reasons the tool replacement is preceded by an orientation. Afterwards the activating of new tool is followed by the technological setting characteristic of the tool (F ; S). The turn-off of contour tracking - similarly to turn-on - occurs out of work, thus contour distortion can be avoided.

10 Reflex Contour - Turned with Left Cutter

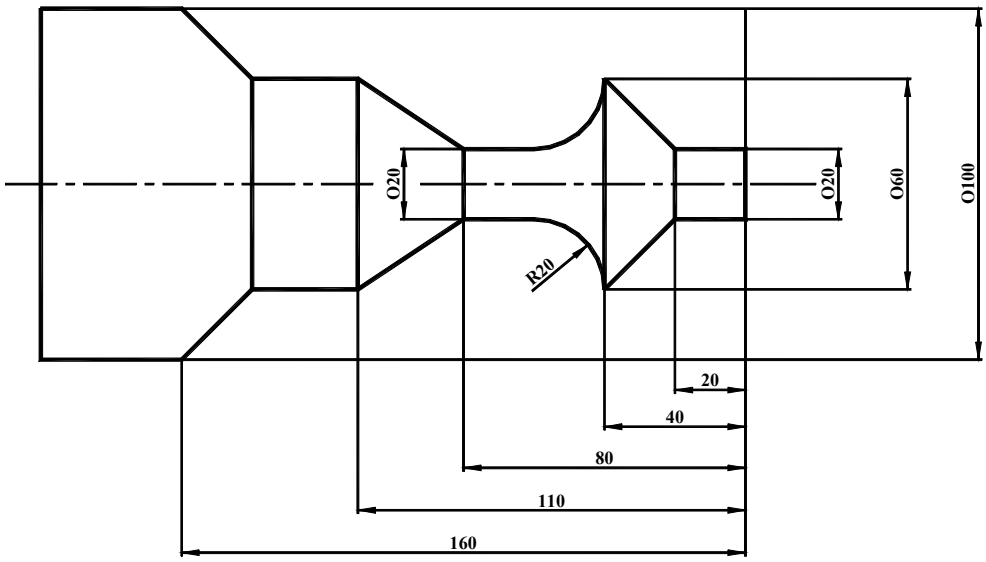

Diagram 10

```
%O7015(EXAMPLE 15)
N100 G0 X200 Z200
N110 T101
N120 G0 X102 Z2
N130 G92 S2500
N140 G96 S100 M8 M3
N150 G71 U1 R0.5
N160 G71 U0.3 W0.3 F0.5 P180 Q240
N170 G0 X40 Z10
N180 G42 X20 Z2
N190 G1 X20 Z-20 F0.2
N200 X60 Z-40
N210 Z-140
N220 X100 Z-160
N230 X102 Z-160
N240 G40 X110 Z-160
N250 G0 X200 Z200
N260 G97 S200
N270 T202
N280 G96 S120 M3 M8
N290 G0 Z-112
N300 X65
N310 G71 U0.3 F0.5 P330 Q380
N320 G0 X65 Z-120
N330 G41 Z2
N340 G1X20 Z-80 ,A-45 F0.2
N350 Z-60
N360 G3 X60 Z-40 R20
N370 G1 X61
N380 G40 X62
N390 G0 X100
N400 Z100
N410 M30
%
```

The speciality of this program is that the contour reflex is roughed and smoothed by a left cutter because of the 90 degree runout of radius R20, while the rest of contour is kept on to be machined by a right cutter, exactly like in the previous example. Positioning on and off must be watched in case of the second cutter, since the work beginning is in the way. Contour positioning on and off occur out of work in order to avoid trimming edges. Naturally turning of formed recessing with forming cutter is performed entirely similarly.

11 Contour Definition

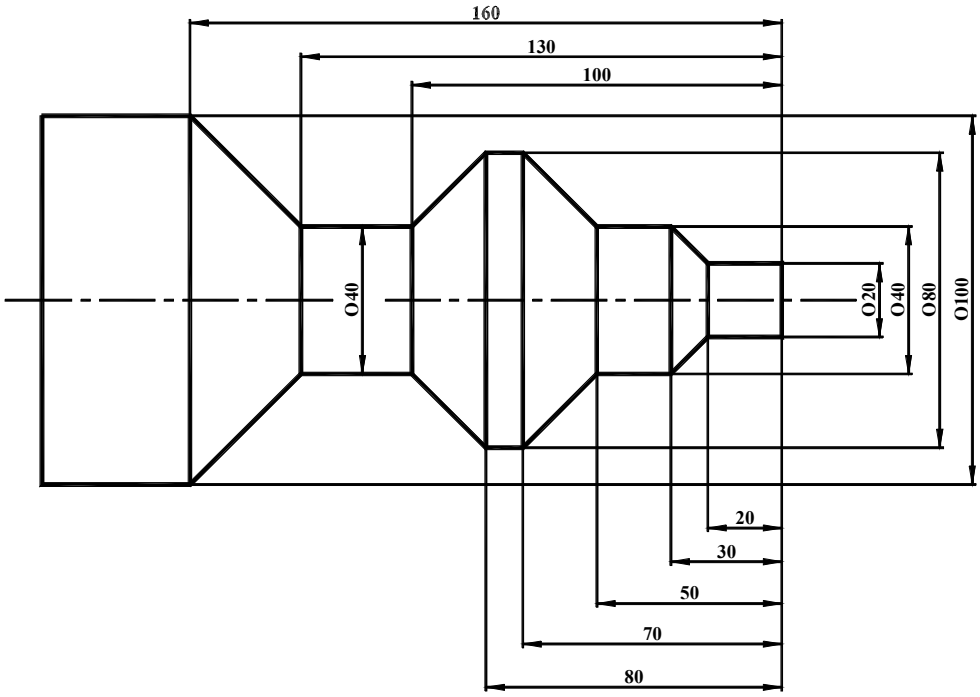

Diagram 11

```
%O7016(EXAMPLE 16)
N100 G0 X200 Z100
N110 T101
N120 G0 X100 Z10
N130 G92 S2500
N140 G96 S100 M8 M3
N150 G71 U1 R0.5
N160 G71 U0.3 W0.3 F0.5 P340 Q410
N170 G0 X82 Z-70
N180 G71 U0.3 F0.5 P430 Q480
N190 G0 Z10
N200 G0 X40
N210 G42 X20 Z2
N220 G1 Z-20 F0.2
N230 X40 Z-30
N240 Z-50
N250 X80 Z-70
N260 Z-80
N270 X40 Z-100
N280 Z-130
N290 X100 Z-160
N300 X104 Z-162
N310 G40 X110
N320 G0 X200 Z200
N330 M30
N340 G42 X20 Z2
N350 G1 Z-20 F0.2
N360 X40 Z-30
N370 Z-50
N380 X80 Z-70
N390 Z-160
N400 X104 Z-162 ,A135
N410 G40 X110
N420 M30
N430 G42 Z-100
N440 X40 Z-100 ,A-135
N450 Z-130
N460 X100 Z-160
N470 X104 Z-162
N480 G40 X110
N490 M30
%
```

This example shows a solution if contour reflex is to be programmed separately for some reason (tapering, cutter change ect.). In such case the part defining smoothing contour for roughing cycle is not applied but is written after M30 indicating program end. In this case program will skip this part and applies only roughing cycle, thus the two further M30s are also unnecessary, they are only indicated in the program for easier interpretation. Address W must not be specified in case of reflex contour roughing, because Z-direction allowance only appears on one side - independent of the sign -, it results in form distortion on the other side.

Smoothing definition is kept on to be executed entirely, but in one step, independent of roughing cycle.

12 Cycles

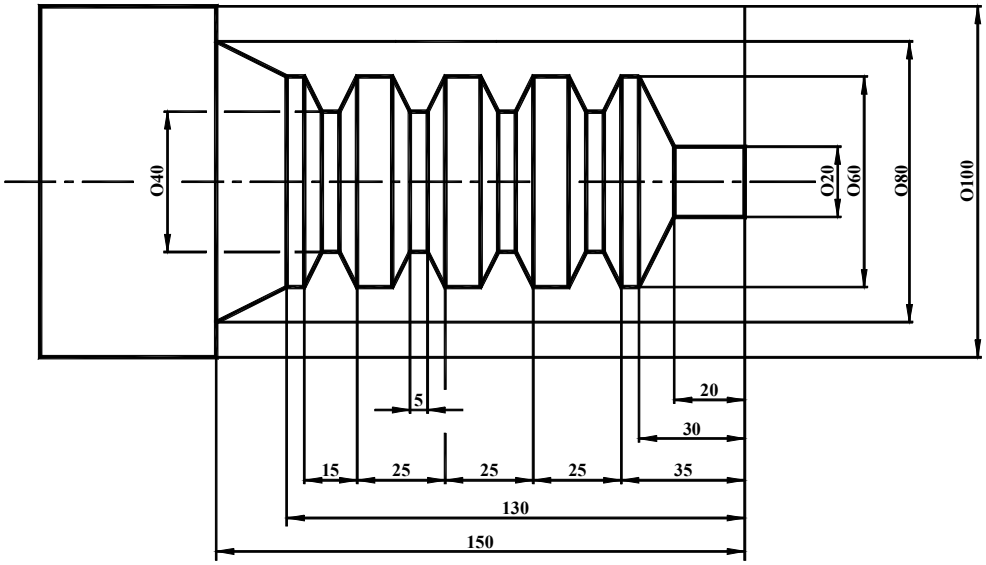

Diagram 12

```
%O7017(EXAMPLE 17)
N100 G0 X200 Z200
N110 T101 (ROUGHING CUTTER)
N120 G0 X98 Z6
N130 G92 S3500
N140 G96 S150 F0.5 M3 M8
/1 N150 G72 W1 R0.5
/1 N160 G72 P180 Q240 U0.3 W0.3
F0.5
N170 G0 X200 Z200
N180 T202 (SMOOTHING CUTTER)
N190 G0 X20 Z5
N200 G41 X20 Z5
N210 G1 Z-20
N220 X60 Z-30
N230 Z-130
N240 X80 Z-150
N250 X102
N260 G40 X105
N270 G0 X200 Z200
N280 T303 (RECESSING CUTTER RIGHT)
N290 G96 S80
N300 #1=1
N310 WHILE[#1LE4] DO1
N320 T303 (RECESSING CUTTER RIGHT)
N330 G0 X62 Z-40
N340 G1 X40
N350 G4 P2
N360 G0 X62
N370 Z-35
N380 G1 X40 Z-40
N390 G4 P2
N400 G0 X62
N410 T313 (RECESSING CUTTER RIGHT)
N420 G0 Z-50
N430 G1 X40 Z-45
N440 G4 P2
N450 G0 X62
N460 G52 ZI-25
N470 #1=#1+1
N480 END1
N490 X200 Z200
N500 M30
%
```

This part is defined by a WHILE cycle. The cycle is realized by the use of macro variable (#1). Cycle core is to be found between commands DO and END. Another solution for performing cycle is to write the repeated part as subprogram and it is called more times. The next task shows an example of this.

13 Subprogram Technique

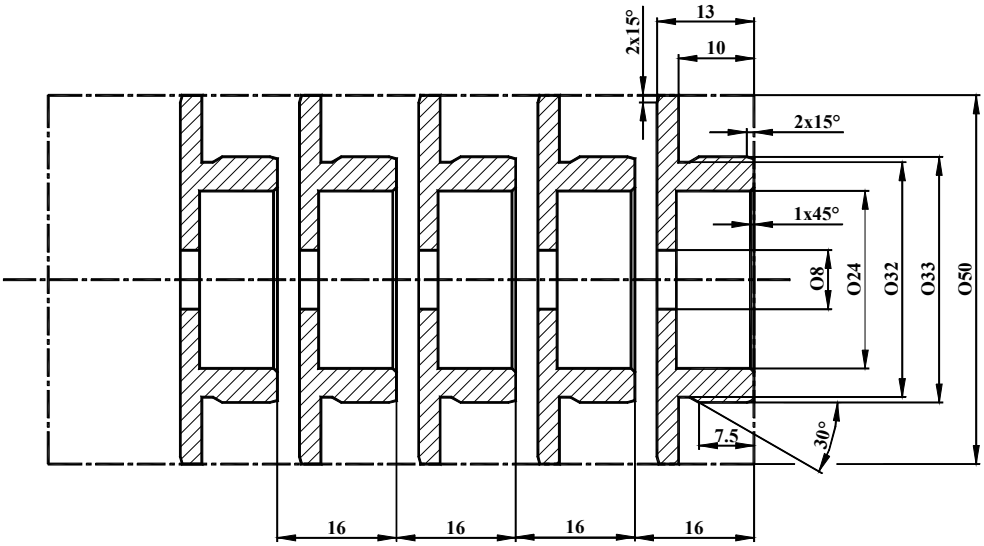

13. ábra

```
%O7018(EXAMPLE 18)
N100 G0 X200 Z200
N110 T101 (SIDE CUTTER)
N120 G0 X62 Z10
N130 G92 S3500
N140 G96 S150 M8 M3
N150 G79 X-1 Z5 F0.2
N160 Z3
N170 Z1
N180 Z0
N190 G0 X200 Z200
N200 G97 S1000
N210 M98 P7019
N220 G52 Z-16
N230 M98 P7019
N240 G52 Z-32
N250 M98 P7019
N260 G52 Z-48
N270 M98 P7019
N280 G52 Z-64
N290 M98 P7019
N300 M30
%
```

Main program, from which subprogram containing programs of each part is called, with realization of coordinate movement. Also a side cycle appears at the beginning of program to eliminate chopping allowance. Siding is realized at constant cutting rate.

```
%O7019(EXAMPLE 19)
N100 T202(ATM 8 DRILL)
N110 S1000 M3 F0.2 M8
N120 G0 X0 Z5
N130 G1 Z-17
N140 G4 P1
N150 G0 Z100
N160 T303 (ATM 20 DRILL)
N170 S1000 M3 F0.2 M8
N180 G0 X0 Z5
N190 G1 Z-10.5
N200 G4 P1
N210 G0 X0 Z10
N220 T333 (ATM 20 DRILL)
N230 G0 G42 X28 Z1.5
N240 G1 X24 Z-0.5
N250 X24 Z-10.5
N260 G1 XI-4
N270 G0 Z10
N280 G0 G40 X100 Z100
N290 T404(EXTERNAL CUTTER)
N300 S1000 M3 F0.2 M8
N310 G0 X50.5 Z1
N320 G71 U0.3 W0.3 D0.5 P330 Q400
N330 G0 G41 X30 Z1
N340 ,A180
N350 G1 X33 Z-2 ,A165
N360 ,A-180
N370 X32 Z-7.5 ,A-150
N380 Z-10
N390 X52
N400 G40 G0 X55
N410 G0 X100 Z100
N420 T505(CUTOFF)
N430 S1000 M3 F0.2 M8
N440 G0 X53
N450 Z-13
N460 G1 X46
N470 G0 X53
N480 G41 Z-12
N490 G1 ,A-90
N500 X48 Z-13 ,A-105
N510 X7
N520 G0 G40 X100 Z100
N530 M99
%
```

Subprogram, where an entire part program is written as total machining. The difference is that the subprogram is closed with command M99 referring to the return to main program. The recessing cutter also prepares a break at the back side of work at the end of program. In the present case drill No. 20 is set to chip also as recessing cutter, thus is drill No. 24 prepared after bore No. 20. Bores are not programmed with the help of drilling cycles here, therefore plane change is not needed before and after drilling.

14 Drilling cycles (Simple Drilling Cycle)

```
%O7020(EXAMPLE 20)
N100 G0 X200 Z200
N110 T101 (SIDE CUTTER)
N120 G0 X82 Z6
N130 G92 S3500
N140 G96 S150 F0.5 M3 M8
N150 G79 X-1 Z5
N160 Z3
N170 Z1
N180 Z0
N190 G97 S500
N200 G0 X100 Z100
N210 T303 (DRILL)
N220 G17 G0 X0 Z50
N230 G81 X0 R2 Z-60 F0.05
N240 G18 G80
N250 G0 X100 Z100
N260 T202 (CONTOUR TURNING
CUTTER)
N270 G0 X82 Z2
N280 G71 U1 R0.5
N290 G71 P230 Q310 U0.3 W0.3 F0.5
N300 G0 X20 Z2
N310 G42 X20 Z1
N320 G1 Z-12
N330 G1 Z-24 ,A160
N340 G1 X48 ,R6
N350 G1 Z-80
N360 G1 X82
N370 G40 X84
N380 G0 X200 Z200
N390 G97 S200
N400 M30
%
```

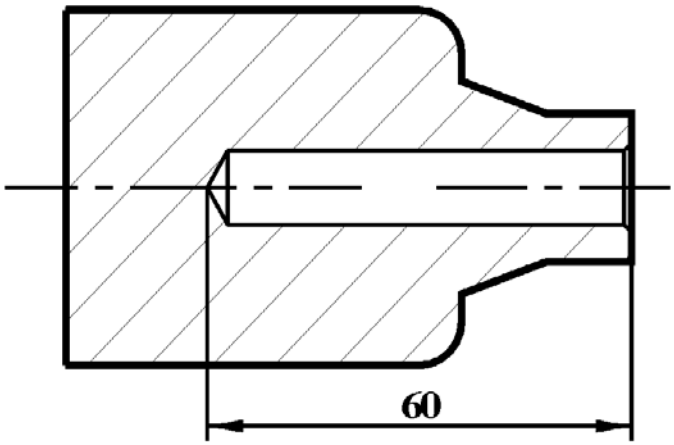

Diagram 14

This example serves to show the usage of drilling cycles, therefore external contour definition is not dealt with in detail here. The most important task when programming os the selection of drilling axis. Since in case of a normal turning machine - which does not contain rotating tool - the drilling axis is axis Z, plane XY must be selected as main plane before programming drilling cycle, independent of the fact that there is no axis Y. (Naturally in case of drilling axis X plane YZ is to be selected.) However plane XZ is needed again for further machining, thus the resetting of original plane selection must be taken care of after finishing cycle. From then on drilling cycles almost only differ in G code and some auxiliary data. Bore location must be programmed at address X, bore base point at address R, while the distance with which the drill approaches the work at rapid traverse at address R - naturally depending on plane selection - for all drilling cycles. Role of R is most significant in case of step bores.
In case waiting is needed on bore base point, line N230 is modified as follows, with the others remaining unchanged:

N230 G82 X0 R2 Z-60 P2,

where waiting is programmed at address P in 1/rev.

In case the bore length demands automatic lifting of chip, line N230 is modified as follows, with the other lines remaining entirely unchanged as before:

N230 G83 X0 R2 Z-60 Q10 E0.5,

where the one-time drilling is programmed at address Q, then after lifting the distance the base point of previous drilling is to be approached at rapid traverse is specified at address E.

In case the bore length demands automatic chip break, line N230 is modified as follows, with the others remaining entirely unchanged:

N230 G83.1 X0 R2 Z-60 Q10 E0.5,

Where the one-time drilling is programmed at address Q, then the lift to chip break is specified at address E.

In case of thread drilling the only difference in line N230 to a simple drilling cycle is in the G code, while the other lines also remain entirely unchanged:

N230 G84 X0 R2 Z-60 F1,

where naturally thread rise is programmed at address F [mm/rev]. It is recommended to program a little less thread rise because of the characteristics of equalizing insert (it only springs in one direction), but there is no exact calculation for this, it has to be specified according to experience.

Naturally the software knows also rigid tap, in this case G84.2 and G84.3 must be programmed, however this can only be used almost exclusively in case of driven tool because of the heavy-weight spindle

15 Parameter Programming

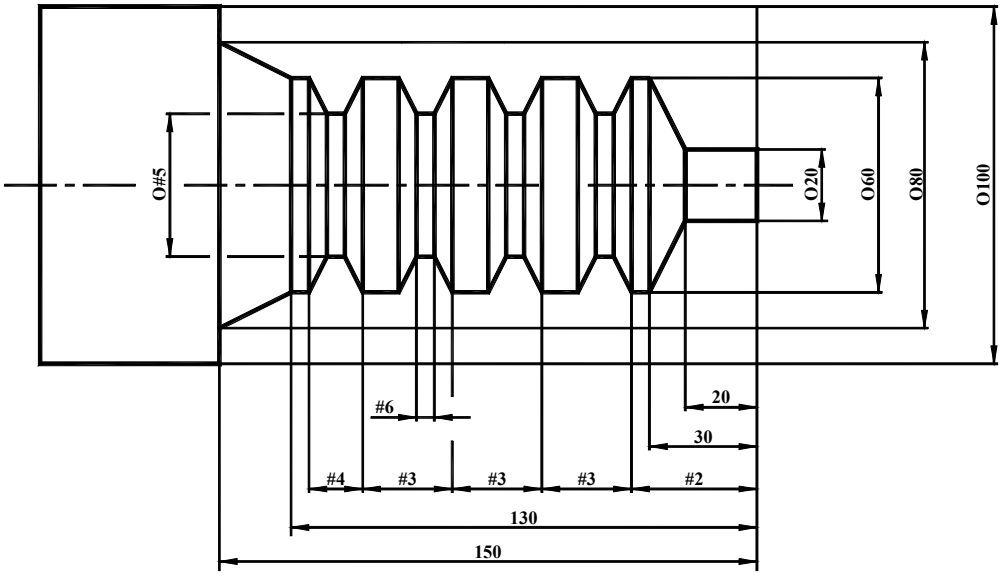

Diagram 15

In this example a recessing line is prepared. Number, width and depth of recessing may change. When defining width, consider that the program first picks out most part of the material with a hold in the center of recessing, then prepares the smoothing of cones again with a hold, so the width of conic part must not be larger than the recessing cutter width. In mathematic terms: #6 > #4 / 3. This condition can also be taken into account when programming. The program structure is similar to that of example No. 17, with the difference that the values are not concrete numbers but variables. Parametric programming can be divided into two main groups. One is when variables are used in program.

```
%O7017(EXAMPLE 17)
N100 G0 X200 Z200
N110 T101 (ROUGHING CUTTER)
N120 G0 X98 Z6
N130 G92 S3500
N140 G96 S150 F0.5 M3 M8
/1 N150 G72 W1 R0.5
/1 N160 G72 P180 Q240 U0.3 W0.3
F0.5
N170 G0 X200 Z200
N180 T202 (SMOOTHING CUTTER)
N190 G0 X20 Z5
N200 G41 X20 Z5
N210 G1 Z-20
N220 X60 Z-30
N230 Z-130
N240 X80 Z-150
N250 X102
N260 G40 X105
N270 G0 X200 Z200
N280 T303 (RECESSING CUTTER RIGHT)
N290 G96 S80
N300 #1=1
N310 WHILE[#1LE4] DO1
N320 T303 (RECESSING CUTTER RIGHT)
N330 G0 X62 Z-40
N340 G1 X40
N350 G4 P2
N360 G0 X62
N370 Z-35
N380 G1 X40 Z-40
N390 G4 P2
N400 G0 X62
N410 T313 (RECESSING CUTTER RIGHT)
N420 G0 Z-50
N430 G1 X40 Z-45
N440 G4 P2
N450 G0 X62
N460 G52 ZI-25
N470 #1=#1+1
N480 END1
N490 X200 Z200
N500 M30
%
```